IDENTIFICATION STAMP
DIV. OF THE STATE ARCHITECT
APP: 03-121846 INC:
REVIEWED FOR
SS ☑ FLS ☑ ACS ☑
DATE: 11/05/2021

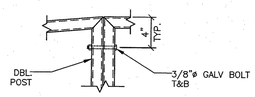

DETAIL SCALE: 3/8"=1'-0" 1

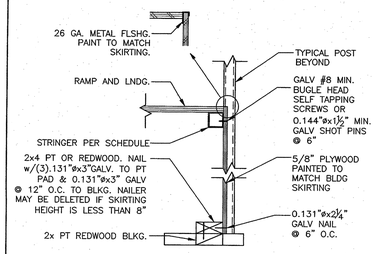

RAMP SKIRT DETAIL SCALE: 3/8"=1'-0" 2

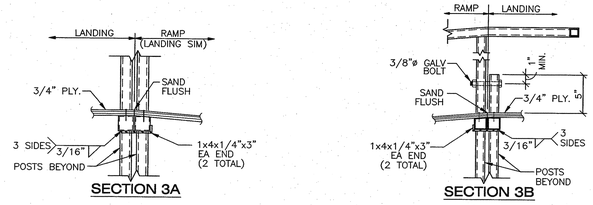

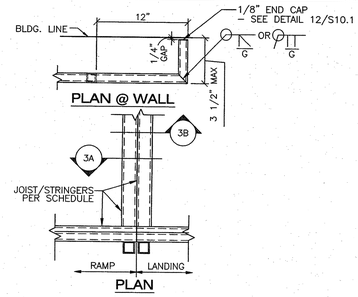

RAMP TO LANDING CONNECTION DETAIL SCALE: 3/8"=1'-0" 3

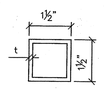

1½"x1½"x11 GA. TUBE
A = 0.602 IN^2
Sx = 0.244 IN^3
Ix = 0.183 IN^4
t = 0.112" MIN.
(0.1175" DESIGN)

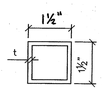

1½"x1½"x14 GA. TUBE
A = 0.390 IN^2
Sx = 0.173 IN^3
Ix = 0.129 IN^4
t = 0.068" MIN.
(0.0713" DESIGN)

1¼"x1¼"x11 GA. TUBE
A = 0.319 IN^2
Sx = 0.114 IN^3
Ix = 0.072 IN^4
t = 0.112" MIN.
(0.1175" DESIGN)

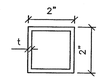

2x2x11 GA TUBE
A = 0.837 IN^2
Sx = .479 IN^3
Ix = .479 IN^4
t = 0.112" MIN.
(0.1175" DESIGN)

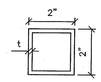

2x2x14 GA TUBE
A = 0.533 IN^2
Sx = 0.324 IN^3
Ix = 0.324 IN^4
t = 0.068" MIN.
(0.0713" DESIGN)

MATERIAL STRENGTH SHALL BE 36 KSI MIN. w/ A MODULUS OF ELASTICITY OF 29,500 KSI ± 3%. ACCEPTABLE STEEL MATERIALS INCLUDE, BUT ARE NOT LIMITED TO, THE FOLLOWING:

ASTM A1011 SS GRADE 36 (Fy=36 KSI)
ASTM A653 SS GRADE 37 (Fy=37 KSI)
ASTM A1008 SS GRADE 40 (Fy=40 KSI)

MATERIAL SHALL BE GIVEN A RUST INHIBITIVE COATING.

THE MATERIAL THICKNESS OF LIGHT GAUGE STEEL MEMBERS, IN THEIR END US, SHALL MEET OR EXCEED THE MINIMUM BASE METAL THICKNESS SPECIFIED ABOVE. THE MATERIAL GAUGE DESIGNATION SHALL BE USED AS REFERENCE ONLY. SPECIFIED STEEL TUBE THICKNESSES ARE MINIMUN. THICKER TUBES MAY BE USED.

LIGHT GAUGE STEEL TUBE PROPERTIES SCALE: 3/8"=1'-0" 4

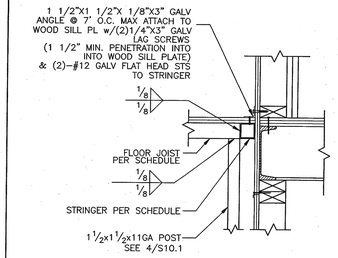

LANDING ATTACHMENT DETAIL SCALE: 3/8"=1'-0" 5

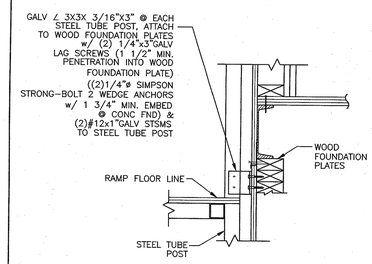

RAMP CONNECTION DETAIL SCALE: 3/8"=1'-0" 6

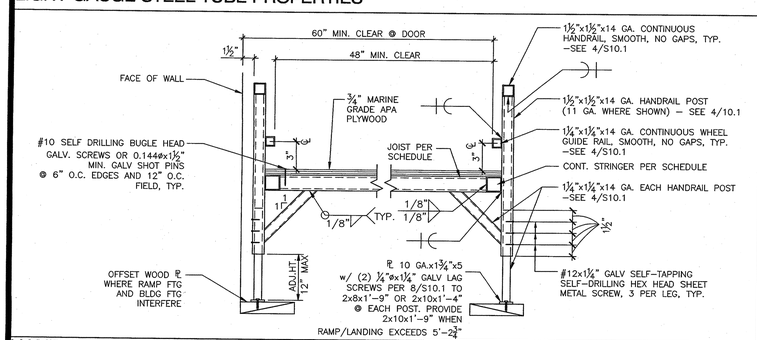

HANDRAIL & RAMP SECTION SCALE: 3/8"=1'-0" 7

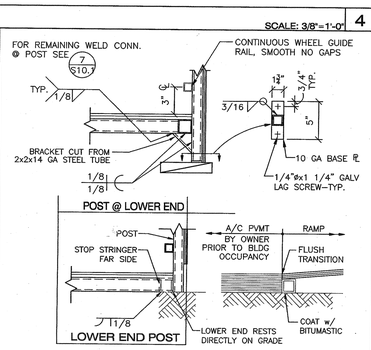

DETAIL SCALE: 3/8"=1'-0" 8

NOTE:
THE ZERO CLEARANCE RAMP LAYOUT IS AN OPTIONAL METHOD ONLY. IT MUST BE APPROVED IN WRITING. IF AMS IS TO PROVIDE THIS OPTION. ARCHITECT/OWNER MUST TAKE INTO ACCOUNT VARYING SITE CONDITIONS, GRADE CHANGES, BUILDING SEPARATION, ETC.

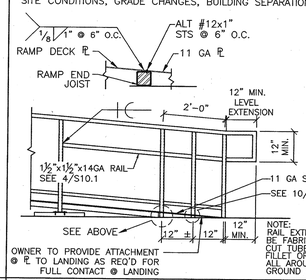

TYP. ZERO CLEARANCE RAMP DETAIL SCALE: 3/8"=1'-0" 9

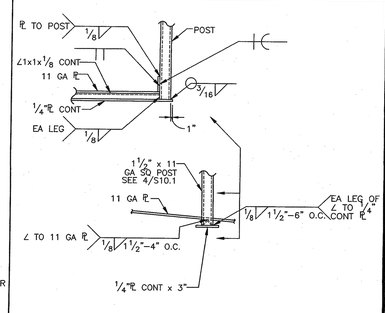

DETAIL SCALE: 3/8"=1'-0" 10

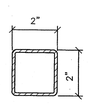

HSS 2x2x1/8
ASTM A500 GRADE B
Fy = 46 KSI
A = 0.840 IN^2
Sx = 0.486 IN^3
Ix = 0.486 IN^4

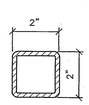

HSS 2x2x3/16
ASTM A500 GRADE B
Fy = 46 KSI
A = 1.19 IN^2
Sx = 0.641 IN^3
Ix = 0.641 IN^4

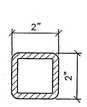

HSS 2x2x1/4
ASTM A500 GRADE B
Fy = 46 KSI
A = 1.51 IN^2
Sx = 0.747 IN^3
Ix = 0.747 IN^4

MATERIAL SHALL BE GIVEN A RUST INHIBITIVE COATING

HSS PROPERTIES 11

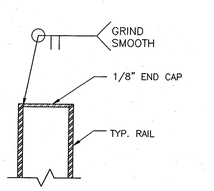

NOTE: END CAP MAY ALSO BE PLASTIC SNAP–ON CAP

END CAP DETAL SCALE: N.T.S. 12

NOT USED 13

FOR REFERENCE ONLY, RAMP AND PLATFORM (NOT BY AMS)

NOT USED 14

AMS American Modular Systems
787 Spreckels Ave. Manteca, CA 95336
Phone (209) 825-1921 - Fax (209) 825-7018
americanmodular.com

MODULAR MANUFACTURER PROPRIETARY STATEMENT

THESE DRAWINGS AND THE MATERIAL CONTAINED THERE–IN ARE THE PROPERTY OF AMERICAN MODULAR SYSTEMS, INC. (AMS) AND SHALL NOT BE REPRODUCED, COPIED OR OTHERWISE DISPOSED OF DIRECTLY OR INDIRECTLY AND SHALL NOT BE USED IN WHOLE OR IN PART TO ASSIST IN THE MAKING OF OR FOR THE PURPOSE OF FURNISHING ANY INFORMATION FOR THE MAKING OF DRAWINGS, PRINTS, APPARATUS OR PARTS THEREOF WITHOUT THE FULL KNOWLEDGE AND WRITTEN CONSENT OF AMS. ALL PATENTABLE MATERIAL CONTAINED HEREIN AND ORIGINATING WITH AMS SHALL BE THE SOLE PROPERTY OF AMS.

PRE–CHECKED SET NAME

24' x 40' THRU 120' x 40' BUILDINGS

SITE SPECIFIC PROJECT NAME

SHEET TITLE

RAMP DETAILS

MANUFACTURER PROFESSIONAL OF RECORD ON PC

LICENSED ARCHITECT
RANDALL PATRICK CRAMER
No. C12631
Ren. 03-31-17
STATE OF CALIFORNIA

REGISTERED PROFESSIONAL ENGINEER
JOHNY D. FRANCIS
S3369
Expires 3/31/04
STRUCTURAL
STATE OF CALIFORNIA

PROJECT SPECIFIC STATE AGENCY APPROVAL

IDENTIFICATION STAMP
DIV. OF THE STATE ARCHITECT
03-118916
ACS FLS SS
Date APR 03 2018

ORIGINAL PC STATE AGENCY APPROVAL

IDENTIFICATION STAMP
DIV. OF THE STATE ARCHITECT
CA. DEPT. OF GENERAL SERVICES
PC 02–113876
ACS FLS SS
DATE 6/22/15

PRE–CHECK (PC) DOCUMENT – CODE: 2013 CBC
A SEPARATE PROJECT APPLICATION FOR CONSTRUCTION IS REQUIRED

REVISIONS
1
2
3
4

DRAWN BY:
SCALE: AS NOTED
DATE:

SHEET NUMBER

S10.1